RASOR®

1946

GRT-MINI

THREE-PHASE CUTTING UNIT

USE MANUAL

COMPANY

Rasor® Elettromeccanica S.r.l. was established in Milan in 1946 by Luigi Spinelli. For more than sixty years it has been producing automatic cutting systems, cutting units for textile applications and electric and pneumatic cutters.

Initially considered as a point of reference for cutting systems in the textile applications, the Rasor® products are nowadays widely used in other fields: chemical, automotive, nautical and sport sectors and in furniture manufacturing.

Nowadays Rasor® can rely on the professional continuity of two generations, with the experience inherited from the promoting partner, with his passion and dedication.

The main characteristic of Rasor® is that each working phase, starting from the manufacturing of the product up to its packing and delivery is carried out in Rasor® premises by qualified operators who have professionaly grown up following the spirit of the company and of its founders. This ensures the high quality which Rasor® has always considered as essential since the beginning of its activity.

Following the innovative spirit mentioned above, our company is constantly focused on the improvement of the product quality, on the study and development of new materials and technologies.

ACKNOWLEDGMENT

Dear Customer,

thank you for choosing a Rasor® Elettromeccanica S.r.l. product.

Rasor® has been a reference point in the field of cutting systems in the textile, clothing, furniture, tailoring, sport, chemical, automotive, nautical and insulating material sectors for years. Its production has been always synonymous with reliability attested by many of satisfied customers.

Rasor® quality system supervises all the company activities in order to provide the Customer with a service that meets its needs and expectations in terms of product quality, delivery reliability and stock of finished products.

All the parts of the devices have been planned and produced to guarantee an optimum performance. In order to keep the high quality level and the long reliabilty of the Rasor® products, it is recommended to use only original spare parts and to contact the head office for any maintenance work.

1. GENERAL SAFETY RULES

This manual is an integral part of cutting unit GRT-MINI and must be carefully read before using it since it gives important indications with regards to its safe installation, use and maintenance. Keep it with care.

Before using cutting unit GRT-MINI, read carefully the following general safety rules.

- PACKAGING.
  After taking off the packaging make sure that the cutting unit is intact. In case of doubt do not use it and contact an authorized service centre. Do not leave pieces of packaging (plastic bags, foam polystyrene, boxes, etc.) within the reach of children or disabled persons since they are potential sources of danger.
- AVOID DANGEROUS ENVIRONMENTS.
  Prevent the cutting unit GRT-MINI components from coming in contact with damp or wet surfaces.
- KEEP CHILDREN AWAY.
  Unauthorized persons, in particular children, must be kept away from the working area.
- FEED CABLE.
  Prevent the feed cable from coming in contact with hot objects, pointed surfaces or sharp edges. Never pull the feed cable of the machine. It must never be replaced by the user. If necessary contact professionally qualified staff.
- KEEP THE WORKING AREA ALWAYS IN ORDER.
  The workplace must always be kept in order and well lightened; liquids or oil traces must not be present.
- ALWAYS USE CUTTING UNITS GRT-MINI PROPERLY.
  Use the cutting units only to carry out the works they have been designed for; do not use them improperly.
- OBSERVE THE USE OF THE TOOLS.
  Do not cut excessively thick materials and always check blade conditions.
- AVOID ACCIDENTAL STARTINGS.
  Before connecting cutting unit GRT-MINI, make sure that everything is installed properly.
- CLOTHING.
  Do not use large clothes or accessories that might get stuck in the moving parts.
- GOGGLES AND PROTECTIVE METAL MESH GLOVES.
  Always use goggles, protective metal mesh gloves approved by Rasor® during use and maintenance operations (according to UNI EN 388:2004 standard).
- SPARE PARTS.
  During maintenance and replacement operations use only original spare parts. Blade maintenance must be only performed by Rasor® technicians.
- INSTALLATION.
  Any installation that is not in conformity with these specifications could jeopardize your safety and cancels the warranty.

Informative letter

The installer and the maintenance man must know the content of this manual. Although the main features of the machine described in this manual are not subject to change, **Rasor® Elettromeccanica S.r.l**. reserves the right to modify the components, details and accessories it deems necessary to improve the machine or to meet manufacturing or commercial requirements at any time and without being obliged to update this manual immediately.

WARNING

ALL RIGHTS ARE RESERVED ACCORDING TO THE INTERNATIONAL COPYRIGHT CONVENTIONS,
The reproduction of any part of this manual, in any form, is forbidden without the prior written authorization of Rasor® Elettromeccanica S.r.l.
The content of this guide can be modified without prior notice. Great care has been taken in collecting and checking the documentation contained in this manual to make it as complete and comprehensible as possible.
Nothing contained in this manual can be considered as a warranty, either expressed or implied - including, not in a restrictive way, the suitability warranty for any special purpose. Nothing contained in this manual can be interpreted as a modification or confirmation of the terms of any purchase contract.

Rasor® Elettromeccanica S.r.l. machines have not been conceived to work in areas at risk of explosions and at high risk of fire and they cannot cut wet or damp materials. Moreover, they cannot work in case of rain.
In case of damage or malfunction, cutting unit GRT-MINI must not be used until the Customer Care Technical Service has repaired them.

Customer Care Technical Service

RASOR® dal 1946

For any information, please contact
RASOR® ELETTROMECCANICA S.r.l.
Via V. Caldesi, 6; 20161, MILANO (MI) - ITALY
Tel: +39.02.66221231; Fax: +39.02.66221293
e-mail: info@rasor-cutters.com
web: www.rasor-cutters.com

WARNING
The original configuration of the cutting unit must not be changed at all.
On receiving the machine make sure the supply corresponds to what has been ordered.
In case of non-compliance immediately inform Rasor®.
Also make sure the cutting unit has not been damaged during transport.

2. TRANSPORT AND PACKING

The cutting unit is delivered in a cardboard box, inside which there are various options. The code of the ordered product and its serial number are indicated outside the package (see picture 1). The following accessories are contained in a bag inside the package:

1) Poligonal blade;
2) Butterfly wrench for blade nut disassembly;
3) Drift for blade disassembly.

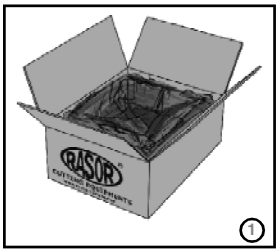

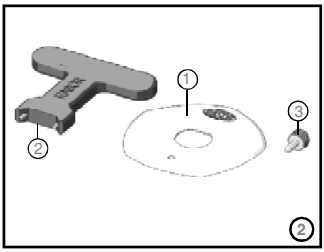

3. PLATE DATA

The manufacturer's identification and Machinery Directive 2006/42/CE conformity plate (see picture below) is located on the front part of the cutting unit.
The plate must not be removed at all, even if the machine is resold. Always refer to the serial number written on the plate itself when contacting the manufacturer.
Several safety warnings are printed on a card which is applied to the cutting unit feeding cable; such warnings must be strictly followed by everyone dealing with the machine. **The company is not to be held responsible for damage to property or accidents to people which might occur if the above-mentioned warnings are not observed. In such a case, the operator is the only person responsible.**

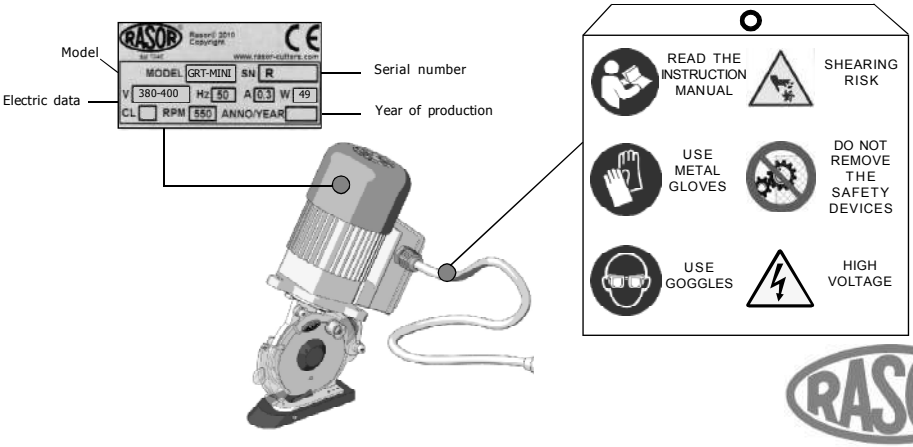

4. PRODUCT DESCRIPTION

The fixture described in this manual is a small cutting unit model GRT-MINI which can be assembled on automatic machines (e.g. spreaders, computerized cutting) by means of proper holes located in the motor support. GRT-MINI can operate continuously and it can cut at various heights by means of multiple installation.

By cutting with the blade and the counterblade always in contact and thanks to the steel upper quality of the blade supplied, GRT-MINI guarantees the clean separation without frayings of the two borders of the cut material. The three-phase motor with extremely compact dimensions and extreme reliability with 86 mm diameter blades, guarantees cuts with thickness up to 2.5 cm. A sharpener assembled on the cutting unit head allows whetting the blade at any moment without disassembling it. After carrying out this operation, it is possible to start cutting again. A high power motor, perfectly balanced, with a high number of revolutions and totally free of maintenance, reduces the vibrations to the minimum, thus making the cutting unit complies with Italian Legislative Decree No. 187 dated 19/8/2005, which adopts European Directive No. 2002/44/CE concerning the risks deriving from mechanical vibrations. The mechanical parts are made of high resistance steel, bronze and aluminium and require lubrication after several working hours.

Device components			
1	Connector block	8	Aluminium base
2	Motor cover	9	Poligonal blade
3	Cable gland	10	Spring locking the thread
4	Motor frame	11	Greaser
5	Sharpening push button	12	Fixed back protection
6	Motor support	13	Hard metal counterblade
7	Movable front protection	14	Motor metal lower with assembly holes

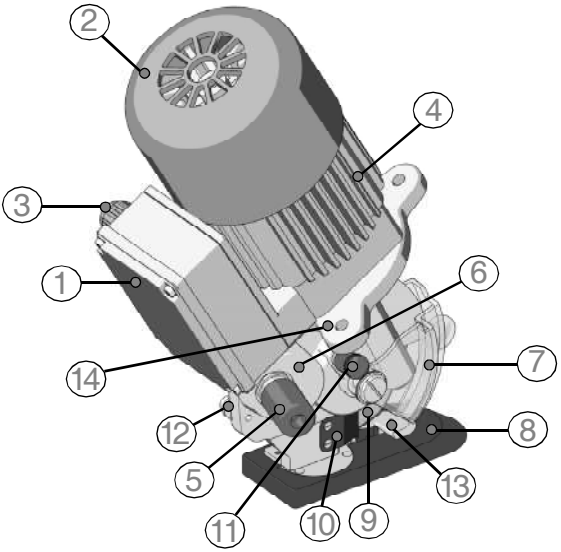

5. TECHNICAL FEATURES

GRT-MINI cutting unit features	
Blade diameter	86 mm with hard metal counterblade
Blade speed	550 rev./min
Cutting working depth	about 25 mm
Motor power	Three-phase-Asynchronous, 50 W (IP65-CL F)
Max. absorption	0.30 A
Weight (with feeding cable)	2650 g
Weight (with package)	3600 g
Electric cable length	1.5 m
Minimum luminosity for working operations	LUX 200
Vibration at the start up	< 2.5 m/s^2
Working temperature	0 ~ 55°C
Working humidity	10 ~ 95% without condensate

Features of the available blades	
86PHSS	5 side blade Ø 86 mm in HSS steel
86THSS	8 side blade Ø 86 mm in HSS steel
86PHSSTF	5 side blade Ø 86 mm, in H.S.S. steel covered with Teflon®
86THSSTN	8 side blade Ø 86 mm in HSS steel covered with T.I.N.
86THSSTF	8 side blade Ø 86 mm, in H.S.S. steel covered with Teflon®
86TMD	8 side blade Ø 86 mm in integral hard metal

The technical data are only indicative and they can be changed without notice

6. NOISE LEVEL

The maximum acoustic pressure level emitted by cutting unit GRT-MINI is about 60 dB (A). Noise tests have been carried out in compliance with Standard ISO 11202:2010.
The device noise levels, measured at different distances (without any sound wave filtering system), vary in the extent of few db (A).

NOTE
It is advisable for cutting unit GRT-MINI owners to verify the compliance with the standard concerning safety of workers: Italian legislative decree N. 81/08.

7. FIELD OF APPLICATION

Cutting unit GRT-MINI has been designed, manufactured and assembled to cut any kind of fabrics or materials, with the exception of metal, plastic or wood, by means of rotary poligonal blades. This equipment must not work:

- in areas prone to explosions;
- in presence of fine dust or corrosive gases;
- on wet or damp materials;
- to cut plastic, metal and wooden materials.

It is forbidden to use cutting unit GRT-MINI for purposes different from the above-mentioned ones.

8. USE WARNINGS

We recommend following the indications below in order to always work in safety conditions.

- All the operations must be carried out complying strictly with the safety rules of the country where the device is to be installed.
- It is STRICTLY FORBIDDEN to smoke during the installation or adjustment operations of the cutting unit.
- The Customer undertakes to comply with and make his staff observe all the rules and regulations in force concerning safety, prevention of accidents and health in the work place. Therefore, the Customer assumes the responsibility to strictly follow all the rules and regulations in force, as well as the special provisions in force in sport and public installations the Customer declares to know after receiving all the relative necessary information.
- **The cutting unit works also without its safety protective device. This protective device must NEVER be removed.**
- Always check the resistance of the material to be cut and the kind of blade which is being used.
- The Customer shall equip his own personnel with all the individual safety protections for the execution of the works, as well as with the ones which might be prescribed by the Manufacturer due to specific danger conditions of the plant or of the area where the personnel must work.
- Do not make any adjustment while the blade is working or while the electric plug is connected.
- Always pay attention to the electric cable position to prevent it from being cut or damaged by the blade.
- It is allowed to assemble cutting unit GRT-MINI on machines O.E.M. on condition that their original structure is not modified. Otherwise, the intervention must be certified by Rasor®.

9. ELECTRIC CONNECTION

Firstly make sure that the lines are able to feed the cutting unit correcltly, in compliance with the safety rules (for the feature required see par. 5).

WARNING ⚠

We suggest installing a magnetothermic safety device before the cutting unit and check that the ground circuit is effective. Before working on the feeding cable pull the plug out. Check that electric connections and protections correspond to the driving force and the plate data values (voltage and current), required by the different electric circuits. By referring to the CEI 11-27/1 standard all the works carried out by means of electric current must be performed by a staff, who has been provided with all the devices required by the above-mentioned standard. For the works carried out under voltage, it is necessary that the employer certifies the suitability, against formative processes. The cutting unit GRT-MINI is supplied with electric cable connected to the connector block located beside the motor. The user must connect the cutting unit to the mains (the cable complies with the CEI 20-22 III Standard). Never change the length of the cable supplied. If it is necessary, use a longer cable and replace the one supplied. To connect the new cable open the cover "**A**" by unscrewing the 4 cross-slotted screws "**B**" (see picture 3). The minimum section of the connecting cables must be determined by the operator in charge of the installation. We recommend to use safety cables and socket IMQ approved. Check the connection by

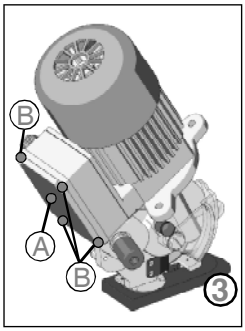

enabling the cutting unit and verify the rotation direction.
The cutting unit is provided with earthing (yellow-green cause unsafe working conditions. Possible damages are not at RASOR® s.r.l. charge.

The electric feeding must be supplied by a line protected against overcurrent by means of the automatic switch (magnetothermal) or delayed fuses with a suitable dimensions. The current of the safety devices must be as low as possible considering the max. absorption of the machine (see identification plate).

WARNING ⚠
The operator must arrange a disconnetting switch on the supply line in order to switch off the machine, if necessary.

10. RESIDUAL RISKS

Even though the cutting unit is safe, operators must pay attention to preserve their and other people's safety.

☹ At the end of the working operations, the motor could be very hot.
☹ The cutting blade can work even when the protective device is disassembled.

11. INSTALLATION AND USE

To install and use the cutting unit manually, proceed as follows:

1) Fix the cutting unit on level squares or angles by means of four 5MA screws, by inserting them in the four holes located in the motor lower cover (see pictures 4 and 5).

NOTE
The cutting unit can be installed in any position/angle: vertically, laterally and it can be turned upside down. It is not compulsory for the Aluminium base to touch the machine table.

2) Lay the material to be cut;
3) Connect the cutting unit to the electric feeding;
4) Put the material on the cutting foot;
5) Adjust the front mobile protection according to the thickness of the material to be cut (see picture 6);
6) Carry out the cutting operation.

NOTE
Cutting unit GRT-MINI can work in a fixed position (the material has to be moved) or it can move forward while the material is kept in the same position. Make sure the material to be cut is properly stretched, preventing it from curling.

WARNING ⚠
Never use the two bolts which fix the motor to the cutting part to fasten cutting unit GRT-MINI. This operation may cause the motor shaft to break. In this case, warranty is not valid.

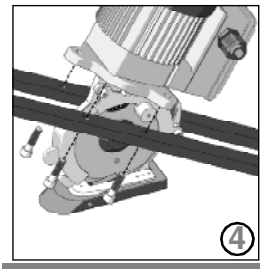

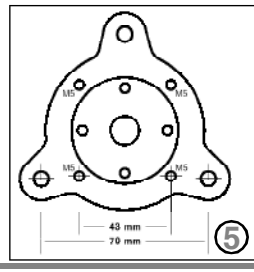

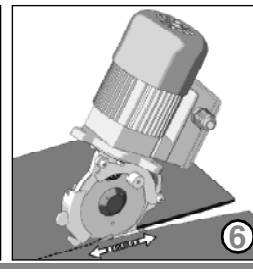

RASOR®
dal 1946

12. BLADE SHARPENING

After many hours of a continuative use of the cutting unit, or if it would not be able to cut anymore, it is necessary to sharp the blade.
To carry out this operation, start the blade and press sharpener "2" located on it for 3-4 seconds (by pressing push button "1", as shown in picture 7).
Repeat the operation 2-3 times.

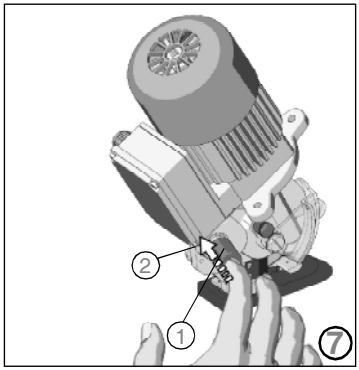

If the sharpening operation is not effective, check the wear of emery grinding wheel "3" (see picture 8).
If grinding wheel "3" is too worn or dirty, replace it.

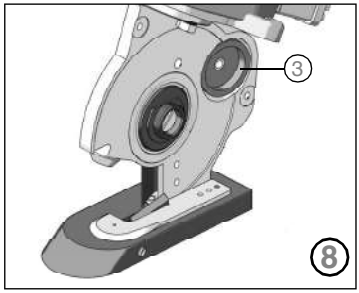

13. LUBRICATION

Every 3-4 working days it is necessary to lubricate the pair of gears. To carry out this operation, remove the protective plug "A" located on the motor support of the cutting unit and fill it with lubricating grease Rasor. Screw plug "A" again a few turns. Screw plug "A" a few turns every 2-3 working days (see picture 9).

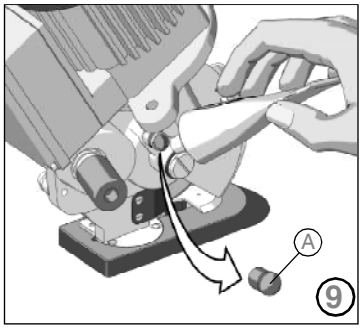

WARNING ⚠

The blade must never be dirty with grease or oil.

14. BLADE REPLACEMENT

If the blade is no more able to cut (even after repeating the sharpening operation several times) it is necessary to replace it. To carry out this operation, use butterfly wrench "1" and drift "3" locking the blade (shown in picture 10).

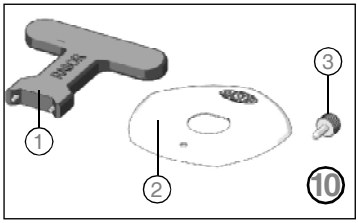

To replace the blade, proceed as follows:

1) Use some protective gloves in compliance with Italian Legislative Decree 81/08;
2) Remove the fixed rear safety guard "A" (see picture 11) by unscrewing the cross-slotted screws "C" by means of a screwdriver (not supplied by the manufacturer) as shown in picture 12.
   Remove the movable front safety guard "B" (see picture 11) by unscrewing pin "D" and by removing washer "E" as shown in picture 12.
3) Insert drift "3" into hole "F" (see picture 13), so as to lock the blade (the hole on the blade must correspond to the one on the structure).
4) Use butterfly wrench "1" to unscrew nut "G" and remove blade "H" (see picture 13).
5) Replace the worn blade with the new one "2", being careful to center the blade on the shaft in the correct position; we remind you to assemble it so that the side with the writing Rasor can be seen by the operator.
6) Assemble all the components again and carry out the sharpening.

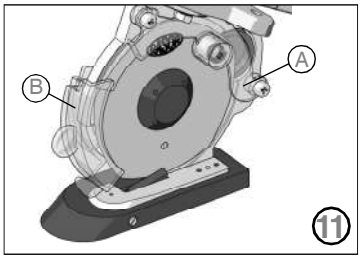

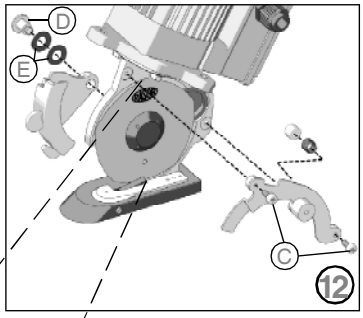

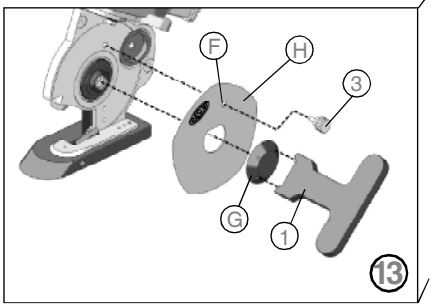

15. TROUBLESHOOTING

PROBLEM	SOLUTION
The fabric is not cut or it gets stuck between the blade and the counterblade	Check the distance between the blade and the counterblade
	Check the kind of fabric
	Sharpen the blade
	Check the fabric thickness
	Check the compatibility between blade and fabric
	Make sure that the motor turns correctly
	Reduce the feeding speed
	Check the counterblade integrity
The cutting unit is noisy	Carry out the lubrication
	Disassemble the blade and remove the material residues
	Check the wear of the pair of gears
The cutting unit starts slowly, works intermittently or it does not start	Check the electric connections on the O.E.M. unit
	Check the electric connections
	Check the feeding cable

16. SPARE PARTS / EXPLODED VIEW

CODE	DESCRIPTION	CODE	DESCRIPTION	CODE	DESCRIPTION	CODE	DESCRIPTION
86PHSS	PENTAGONAL BLADE Ø 86 mm, H.S.S. STEEL	GRT8617	MOTOR BEARING mm 6x19x6	SW1086CPL	COMPLETE SHARPENER UNIT	T105200	MOTOR SUPPORT FIXING BOLT
GMT8660	MOTOR 3-PH 380 V 60 Hz	GRT8618	MOTOR BEARING mm 10x30x9	SW108700	EMERY PIN	T105300	WASHER
GMT8660/480	MOTOR 3-PH 480 V 60 Hz	GRT8619	COMPENSATION RING	SW108800	EMERY SPRING Ø 11 mm	T105600	ADJUSTING WASHER
GRT101800	WORM SCREW	GRT86M24	COMPLETE MOTOR FRAME	SW108900	SHARPENING BUSH	T105700	RING BEARING FIXING RING NUT
GRT1018CPL	COMPLETE PAIR OF GEARS	GTM8600	MOTOR 3-PH 380 V 50 Hz	SW109000	SHARPENER SPRING Ø 6 mm	T105800	GEAR RING BEARING
GRT1059CPL	COMPLETE GEAR RING	S867401S	ALUMINIUM SIMPLE BASE	SW109100	SHARPENING PUSH BUTTON	T106000	GEAR RING FIXING LEFT SCREW
GRT10M18	MOTOR COVER	S867401SCPL	ALUMINIUM COMPLETE BASE	SW109200	SHARPENING PUSH BUTTON FIXING SCREW	T106100	SUBBLADE RING
GRT10M19	FAN	S8676S	SPRING WITH DOWEL	SW109300	SHARPENING WASHER	T106300	BLADE FIXING RING NUT
GRT10M21	UPPER MOTOR FLANGE	S867900	SCREW FASTENING THE COUNTERBLADE HOLDER	T101801	ELASTIC PIN	T107000	BASE/SECTOR FIXING SCREW
GRT10M26	LOWER MOTOR FLANGE	SW104101	REAR GUARD FIXING SCREW	T104401	FRONT PROTECTION GUARD	T107500	BLADE ASSEMBLING/ DISASSEMBLING WRENCH
GRT10M97	COMPLETE TERMINAL BOX SUPPORT	SW104102	OILER RING	T1044CPL	FRONT PROTECTION SET	T107600	DRIFT LOCKING THE BLADE
GRT27	FLAME-RETARDANT FEEDING CABLE	SW104103	OILER RING SPRING	T104500	FRONT GUARD FIXING SCREW	T107900	LUBRICATING GREASE
GRT8613	COMPLETE ROTOR	SW108000	COUNTERBLADE HOLDER	T104501	CURVED WASHER	T8641M	REAR PROTECTION GUARD
GRT8614	MOTOR FRAME SCREW	SW108100	WIDIA COUNTERBLADE	T104700	GREASER CAP	T8641MCPL	REAR PROTECTION SET
GRT8615	SPACER	SW108200	COUNTERBLADE FIXING SCREW	T104800	GREASER	T864900	PLATE LOCKING THE THREAD
GRT8616	FASTENING DOWEL	SW108600	EMERY GRINDING WHEEL	T105000	FIXING SCREW OF THE PLATE LOCKING THE THREAD	T865400	ANTI-FRICTION BUSH
						T865501CPL	COMPLETE MOTOR SUPPORT

RASOR®
dal 1946

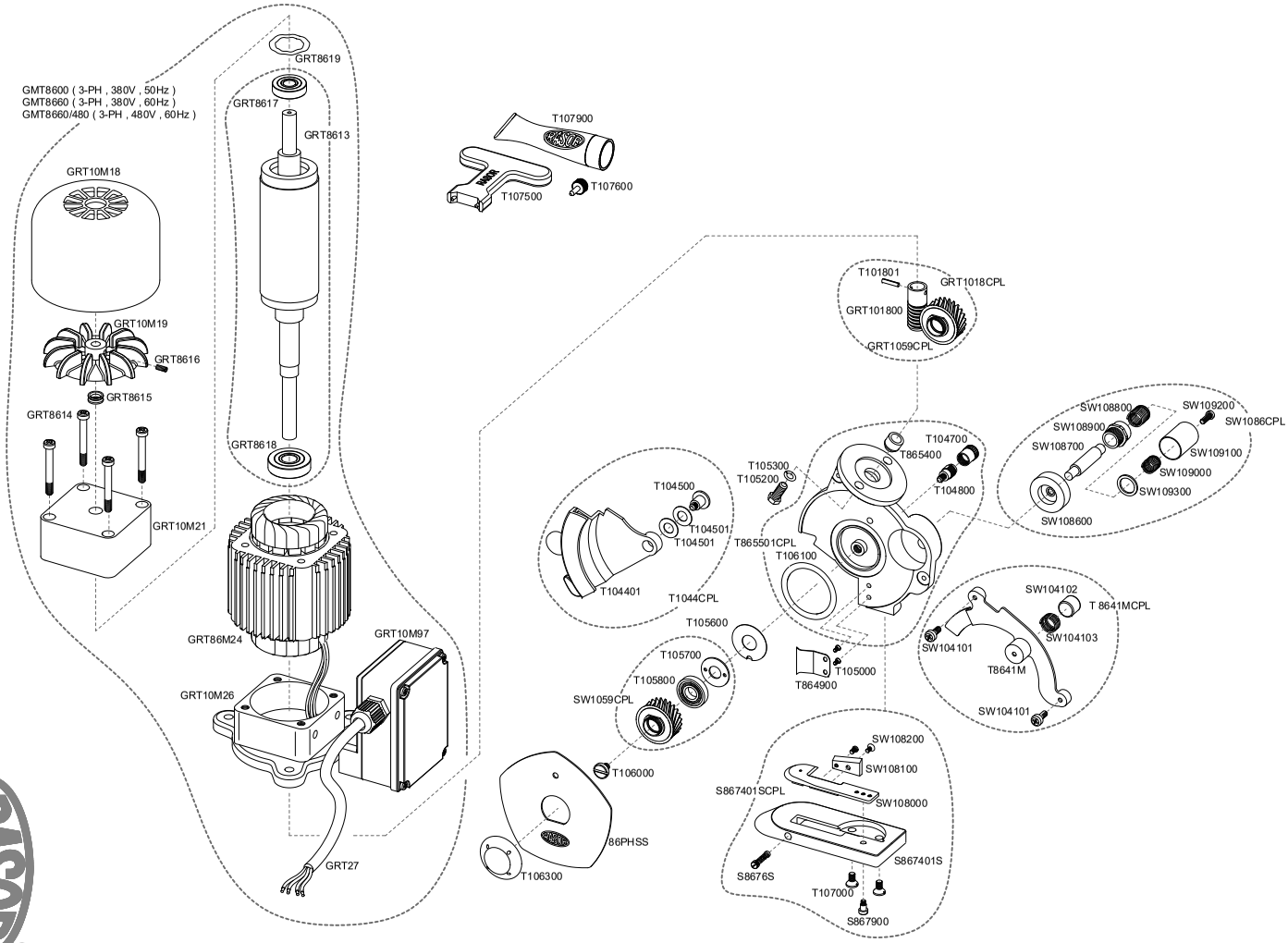
GMT8600 (3-PH , 380V , 50Hz)
GMT8660 (3-PH , 380V , 60Hz)
GMT8660/480 (3-PH , 480V , 60Hz)
GRT8619
GRT8617
GRT8613
GRT10M18
GRT10M19
GRT8616
GRT8615
GRT8614
GRT8618
GRT10M21
GRT86M24
GRT10M97
GRT10M26
GRT27
T107900
T107500
T107600
T101801
GRT1018CPL
GRT101800
GRT1059CPL
T104700
T865400
T104800
T105300
T105200
T104500
T104501
T104501
T865501CPL
T106100
T104401
T1044CPL
T105600
T105700
T105800
SW1059CPL
T105000
T864900
T106000
86PHSS
T106300
SW108800
SW109200
SW1086CPL
SW108900
SW108700
SW109100
SW109000
SW109300
SW108600
SW104102
T 8641MCPL
SW104103
SW104101
T8641M
SW104101
SW108200
SW108100
S867401SCPL
SW108000
S867401S
S8676S
T107000
S867900

dal 1946

WARRANTY

Rasor® Elettromeccanica S.r.l. cutting unit has a 12 month warranty from the date indicated on the last page of this manual, except in case of different written agreements.
The warranty covers all manufacturing and material defects. Replacement and repair operations are covered only if carried out by our company and at our workshop. If in-warranty goods need to be repaired, **the customer must always send the complete machine to Rasor®. Single units will not be repaired under warranty.**
The material to be repaired must be sent CARRIAGE FREE.
Once the machine has been repaired, it will be sent CARRIAGE FORWARD to the customer.
The warranty covers neither technicians' intervention on site nor the cutting unit disassembly from the installation place.
If, for practical reasons, one of our technicians is sent to the premises, the customer will be charged the costs plus the travelling expenses.

The warranty does not include:

failure caused by wrong use or assembly,
failure caused by external agents,
failure caused by lack of maintenance or neglicence,
blades and parts subject to wear.

WARRANTY FORFEITURE:

In case of arrearage or other breaches of contract,
Whenever changes or repairs are carried out on our cutting units without our prior authorization,
Whenever the serial number is tampered with or cancelled,
Whenever the damage is caused by improper use, bad treatment, bumps, falls and other causes not due to normal working conditions,
Whenever the unit seems tampered with, dismantled or previously repaired by unauthorized staff,
In case the cutting units are used for purposes that are different from the ones described in this manual.

All repair operations carried out under warranty do not interrupt its duration.

All disputes will be settled in the court of justice of Milan (Italy).

We thank you in advance for the attention you will pay to this manual and we invite you to inform us of any change you deem necessary to improve it and make it more complete.

RASOR ELETTROMECCANICA SRL
Via Vincenzo Caldesi 6
20161 Milan · Italy
ph. +39 02 66 22 12 31
fax +39 02 66 22 12 93
info@rasor-cutters.com

www.rasor-cutters.com

FOLLOW US: